Surge Protective Devices
(SPDs) for Local Area Networks (LAN)

Local Area Networks (LAN)

RayDat NET 6 POE*

*UL Listed

Special features:

- Very high surge ratings
- Metal housing with DIN rail mounting
- Cat 6 capability
- POE compliant in accordance to IEEE 802.3af, IEEE 802.3at and IEEE 802.3bt.

Symbol Legend:

DIN Rail Mounting

Plug-In Connection

Compact Design

Shield Directly Grounded

RayDat NET 6 POE is intended to protect Local Area Networks (LAN) from overvoltage surges and electrostatic discharges created by switching transients inside buildings. LAN systems are particularly prone to such disturbances due to long cable lengths since long cable lengths often behave like antennas to atmospheric disturbances. The product provides protection to all four lines in the UTP, STP and is Cat 6 capable. Ground potential equalization between signal and protective network or PC chassis ground is provided. The product is suitable for protection of 1 Gbit/s lines and fully compatible with all versions of PoE applications. It is compatible with standards IEEE 802.3af, IEEE 802.3at and IEEE 802.3bt.

RoHS COMPLIANT

DATA SHEET

SPD for LAN Category 6 Networks

RayDat NET 6 POE

D1•C1•C2•C3

UL Listed

IEC/EN Category: D1/C1/C2/C3
Surge Discharge Ratings: I_n: 10 kA, I_{imp}: 1 kA
Voltages: 48 V DC
Max. Operating Voltage: 50 V
Frequency Range: 250 MHz, up to Cat 6, up to PoE++ Compatible
Housing: Compact Design
Compliance: IEC/EN 61643-21
UL 497B 4th Edition

Technical Data

NET 6 POE			48
Electrical			
Number of Protected Pairs			4 Pairs (8 Conductors)
Nominal Operating Voltage (DC)		U_n	48 V
Maximum Continuous Operating Voltage (DC)	(Line-Line)	U_c	50 V
	(Pair-Pair)		72 V
Rated Load Current at 25°C		I_L	1 A
Nominal Discharge Current (8/20 µs)	(Line-Line)	I_n	150 A
C2 Total Discharge Current (8/20 µs)	(Lines-Ground)	I_n	10 kA
D1 Impulse Current (10/350 µs)		I_{imp}	1 kA
Voltage Protection Level at I_n	(Line-Line)	U_p	150 V
	(Line-Ground)		550 V
Response Time Overvoltage Protection		t_A	< 1 ns
Cut-off Frequency		f_G	250 MHz
Mechanical			
Temperature Range			-40 °F to +176 °F [-40 °C to +80 °C]
Connection Type			Input/Output: RJ45 Sockets
Degree of Protection IEC/EN 60529			IP 20
Housing Material			Metal
Mounting IEC/EN 60715			35 mm DIN Rail
Order Information			
Order Code			**48**
NET 6 POE			706 312

Information contained in this document is subject to change at any time without notice.

RayDat NET 6 POE

Internal Configuration

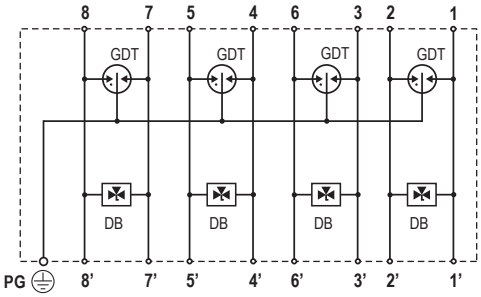

Legend

DB *Diode Block*
GDT *Gas Discharge Tube*
PG *Protective Grounding*

Dimensions & Packaging

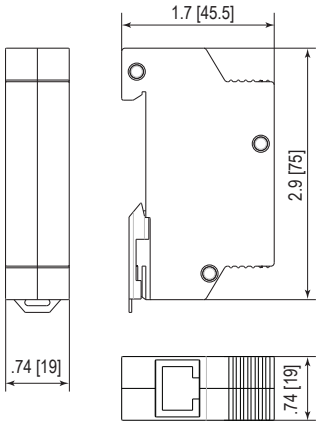

NET 6 POE	48
Dimensions	
Weight per Unit	4.23 oz [120 g]
Dimensions DIN 43880	.74" [19 mm]
Packaging Dimensions (Single Unit)	3.1 × .91 × 4.3" [78 × 23 × 108 mm]
Minimum Package Quantity	12 pieces

inches
[mm]

Information contained in this document is subject to change at any time without notice.

RoHS COMPLIANT

© 2020 Raycap All rights reserved.
G29-00-041 201120

Surge Protective Devices
(SPDs) for Bus Systems

Bus Systems

RayDat SBH-3*
RayDat SGH-3
RayDat RS 485
RayDat KNX

*UL Listed

Special features:

- Very high surge ratings
- Equipped with screw or quick connect (spring loaded) terminals
- Different shield handling options available
- The connection lines remain enabled during module replacement

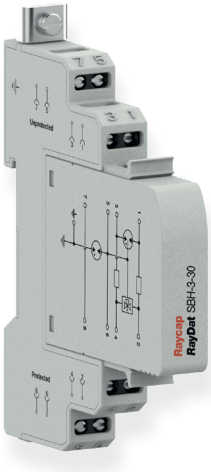

Symbol Legend:

DIN Rail Mounting

Screw Connect Terminals

Quick Connect Terminals

Modular Design

Shield Indirectly Grounded

The RayDat SBH-3 Series of surge protective devices has been developed to protect fieldbus systems (CAN Bus, Profibus DP, RS 232/V.24 m, RS 485, Sinec L2). It is intended for those applications where high ground potential rises may frequently occur, such as in locations close to electric railways.

The RayDat RS 485 has been designed to protect all versions of RS 485. It can be used for protection of RS 422 and V.11 protocol as well.

Coarse protection is provided by a three terminal gas discharge tube (GDT), while fine protection is provided using a high-speed silicon stage, which provides both, common (longitudinal) mode protection from each line to protective ground and differential (transverse) mode protection between each pair. Care is taken to ensure coordination between these two stages without voltage or surge current blind spots occurring. Thermal protection is provided to reduce the hazards of thermal runaway, should there be an inadvertent mains incursion fault.

RayDat KNX – has been designed to protect KNX systems. Its special design allows the protector to be installed directly to bus terminals.

RoHS COMPLIANT

Modular SPD for Industrial Fieldbus Systems

RayDat SBH-3 Series

D1 • C1 • C2 • C3

UL Listed

IEC/EN Category: D1/C1/C2/C3
Surge Discharge Ratings: I_n: 10 kA, I_{max}: 20 kA, I_{imp}: 2.5 kA
Voltages: 5, 12, 30 V DC
Frequency Range: 30 MHz
Housing: Modular Design
Compliance: IEC/EN 61643-21
UL 497B 4th Edition

Configuration:

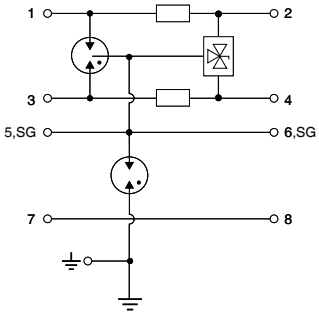

Technical Data

SBH-3 Series			5	12	30
Electrical					
Lines Protected				1 (2 Conductors)	
Nominal Operating Voltage (DC)		U_n	5 V	12 V	30 V
Maximum Continuous Operating Voltage (DC)		U_c	6 V	15 V	33 V
Rated Load Current at 25°C		I_L		1 A	
C2 Nominal Discharge Current (8/20 µs)		I_n		10 kA	
Maximum Discharge Current (8/20 µs)		I_{max}		20 kA	
D1 Impulse Current (10/350 µs)		I_{imp}		2.5 kA	
Residual Voltage at 5 kA (8/20 µs)	(Line-Line)	U_{res}	< 22 V	< 42 V	< 80 V
Rated Spark Overvoltage	(SG-Ground)			184-276 V	
	(Line-Line)		7-10 V	16-19 V	35-43 V
Response Time Overvoltage Protection	(Line-Line)	t_A		< 1 ns	
	(Line-Ground)			< 100 ns	
Insulation Resistance of the Protection	(Line-Ground)	R_{iso}		> 1 GΩ / 100 V	
	(Line-Line)		≥ 6 KΩ	≥ 15 MΩ	≥ 33 MΩ
Serial Resistance per Path		R		1.6-2.0 Ω	
Transverse Capacitance	(Line-Line)	C		50 pF	
	(Line-Ground)			5 pF	
Cut-off Frequency		f_G		30 MHz	
Mechanical					
Temperature Range				-40 °F to +176 °F [-40 °C to +80 °C]	
Terminal Cross Section Multi-strand (max.)				12 AWG	
				4 mm², 2.5 mm² Q Version	
Terminal Screw Torque				4.5 lbf·in [0.5 Nm]	
Degree of Protection IEC/EN 60529				IP 20 (built-in)	
Housing Material				Thermoplastic; Grey; Extinguishing Degree V-0	
Mounting IEC/EN 60715				35 mm DIN Rail	
Order Information					
Order Code			5	12	30
SBH-3-xx			7082.86	7082.88	7082.90
SBH-3-xxQ (Quick Connect Terminals)			7085.21	7085.22	7085.23
SBH-3-xxM (module)			7082.87	7082.89	7082.91

RayDat SBH-3 Series

Internal Configuration

Legend

DB	*Diode Block*
GDT	*Gas Discharge Tube*
PG	*Protective Grounding*
R	*Resistor*
SG	*Signal Grounding*
TC	*Thermo-clip*

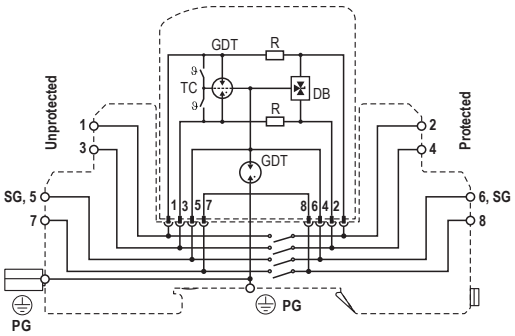

Dimensions & Packaging

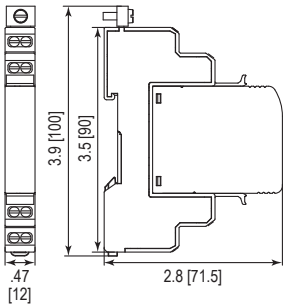

SBH-3 Series	5	12	30
Dimensions			
Weight per Unit		2.11 oz [60 g]	
Dimensions DIN 43880		2/3 TE	
Packaging Dimensions (Single Unit)		3.4 × .59 × 4" [87 × 15 × 102 mm]	
Minimum Package Quantity		15 pieces	

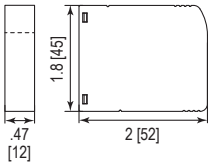

SBH-3-xxM Series	5	12	30
Dimensions			
Weight per Unit		.91 oz [26 g]	
Packaging Dimensions (Single Unit)		3.4 × .59 × 4" [87 × 15 × 102 mm]	
Minimum Package Quantity		15 pieces	

Quick Connect Terminals

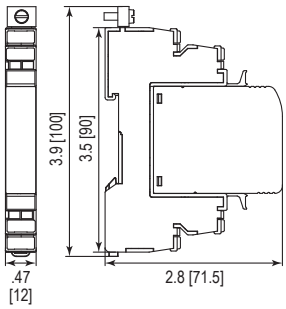

SBH-3-xxQ Series	5	12	30
Dimensions			
Weight per Unit		2.18 oz [62 g]	
Dimensions DIN 43880		2/3 TE	
Packaging Dimensions (Single Unit)		3.4 × .59 × 4" [87 × 15 × 102 mm]	
Minimum Package Quantity		15 pieces	

inches
[mm]

RoHS COMPLIANT

SPD with Separated Signal Ground (RS 232)

RayDat SGH-3 Series

D1 • C1 • C2 • C3

IEC/EN Category: D1/C1/C2/C3
Surge Discharge Ratings: I_n: 10 kA, I_{max}: 20 kA, I_{imp}: 2.5 kA
Voltages: 5, 12, 15, 24, 30, 48, 60, 110 V DC
Frequency Range: 30 MHz
Housing: Modular Design
Compliance: IEC/EN 61643-21
Configuration:

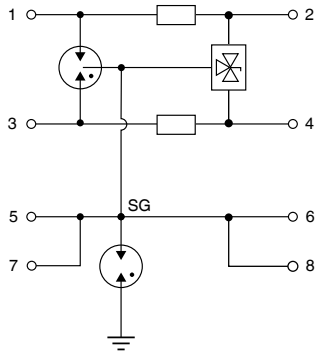

Technical Data

SGH-3 Series		5	12	15	24	30	48	60
Electrical								
Lines Protected					1 (2 Conductors)			
Nominal Operating Voltage (DC)	U_n	5 V	12 V	15 V	24 V	30 V	48 V	60 V
Maximum Continuous Operating Voltage (DC)	U_c	6 V	15 V	18 V	28 V	33 V	52 V	64 V
Rated Load Current at 25°C	I_L				1 A			
C2 Nominal Discharge Current (8/20 µs)	I_n				10 kA			
Maximum Discharge Current (8/20 µs)	I_{max}				20 kA			
D1 Impulse Current (10/350 µs)	I_{imp}				2.5 kA			
Residual Voltage at 5 kA (8/20 µs) (Line-Line)	U_{res}	< 22 V	< 42 V	< 48 V	< 70 V	< 80 V	< 140 V	< 160 V
Rated Spark Overvoltage (SG-Ground)					184-276 V			
(Line-Line), (Line-SG)		7-10 V	16-19 V	20-24 V	30-36 V	35-43 V	55-68 V	67-85 V
Response Time Overvoltage Protection (Line-Line)	t_A				< 1 ns			
(Line-Ground)					< 100 ns			
Insulation Resistance of the Protection (Line-Line)	R_{iso}	≥ 6 KΩ	≥ 15 MΩ	≥ 18 MΩ	≥ 28 MΩ	≥ 33 MΩ	≥ 52 MΩ	≥ 64 MΩ
(Line-Ground)					> 1 GΩ / 100 V			
Serial Resistance per Path	R				1.6-2.0 Ω			
Transverse Capacitance (Line-Line)	C				50 pF			
(Line-Ground)					5 pF			
Cut-off Frequency	f_G				30 MHz			
Mechanical								
Temperature Range					-40 °F to +176 °F [-40 °C to +80 °C]			
Terminal Cross Section Multi-strand (max.)					12 AWG [4 mm², 2.5 mm² Q Version]			
Terminal Screw Torque					4.5 lbf·in [0.5 Nm]			
Degree of Protection IEC/EN 60529					IP 20 (built-in)			
Housing Material					Thermoplastic; Grey; Extinguishing Degree V-0			
Mounting IEC/EN 60715					35 mm DIN Rail			
Order Information								
Order Code		5	12	15	24	30	48	60
SGH-3-xxx		7086.61	7086.62	7086.63	7086.64	7086.65	7086.66	7086.67
SGH-3-xxxM (module)		7086.69	7086.70	7086.71	7086.72	7086.73	7086.74	7086.75

RayDat SGH-3 Series

Internal Configuration

Legend

DB	*Diode Block*
GDT	*Gas Discharge Tube*
R	*Resistor*
PG	*Protective Grounding*
SG	*Signal Grounding*
TC	*Thermo-clip*

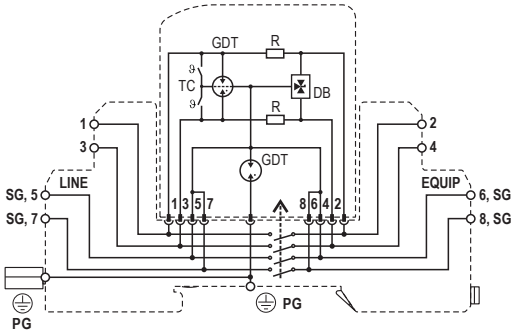

Dimensions & Packaging

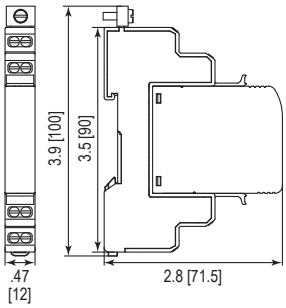

SGH-3 Series	5	12	15	24	30	48	60
Dimensions							
Weight per Unit	2.11 oz [60 g]						
Dimensions DIN 43880	2/3 TE						
Packaging Dimensions (Single Unit)	3.4 × .59 × 4" [87 × 15 × 102 mm]						
Minimum Package Quantity	15 pieces						

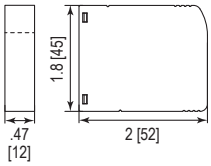

SGH-3-xxxM Series	5	12	15	24	30	48	60
Dimensions							
Weight per Unit	.91 oz [26 g]						
Packaging Dimensions (Single Unit)	3.4 × .59 × 4" [87 × 15 × 102 mm]						
Minimum Package Quantity	15 pieces						

inches
[mm]

RoHS COMPLIANT CE

SPD for RS-485 Systems

RayDat RS 485

D1 • C1 • C2 • C3

IEC/EN Category:	D1/C1/C2/C3
Surge Discharge Ratings:	I_n: 20 kA, I_{imp}: 2.5 kA
Voltages:	5 V DC
Max. Operating Voltage:	6 V DC
Frequency Range:	1 MHz
Housing:	16 Terminal, Compact Design
Compliance:	IEC/EN 61643-21

Technical Data

RS 485

Electrical			
Number of Protected Pairs			2(4 Conductors)
Nominal Operating Voltage (DC)		U_n	5V
Maximum Continuous Operating Voltage (DC)		U_c	6 V
Rated Load Current at 25°C		I_L	500 mA
C2 Nominal Discharge Current (8/20 µs)	(Line-Line)	I_n	20 kA
D1 Impulse Current (10/350 µs)		I_{imp}	2.5 kA
Residual Voltage at 5 kA (8/20µs)	(Line-Line)	U_{res}	20 V
Rated Spark Overvoltage	(5, 6, 7 & 8-4, SG)		6.5 V – 8.5 V
	(5-6 & 7-8)		6.5 V – 8.5 V
	(5,6,7 & 8-2, PG)		78 V – 116 V
Response Time Overvoltage Protection	(5,6,7,8,SG)	t_A	< 1 ns
Thermal Protection	(5,6,7,8)		Yes
Insulation Resistance of Protection		R_{iso}	6 kΩ
Serial Resistance per Path		R	1.7 – 1.9 Ω
Transverse Capacitance		C	< 2nF
Cut-off Frequency		f_G	> 1 MHz
Mechanical			
Temperature Range			-40 °F to +176 °F [-40 °C to +80 °C]
Terminal Cross Section Multi-strand (max.)			2x14 AWG [2 × 2.5 mm²]
Terminal Screw Torque			17.7 lbf.in [2.0 Nm]
Degree of Protection IEC/EN 60529			IP 20 (built-in)
Housing Material			Thermoplastic; Grey; Extinguishing Degree V-0
Mounting IEC/EN 60715			35 mm DIN Rail
Order Information			
Order Code			
RS 485			703 812

RayDat RS 485

Internal Configuration

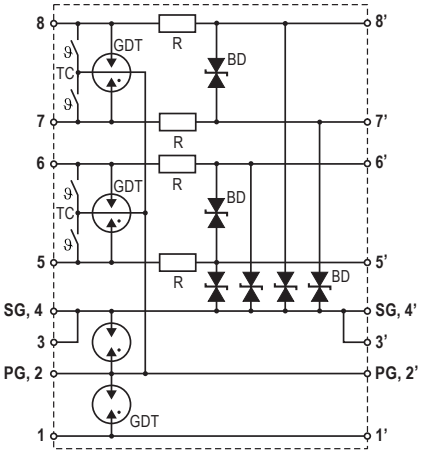

Legend

BD	*Bi-directional TVS Diode*
GDT	*Gas Discharge Tube*
PG	*Protective Grounding*
R	*Resistor*
SG	*Signal Grounding*
TC	*Thermo-clip*

Dimensions & Packaging

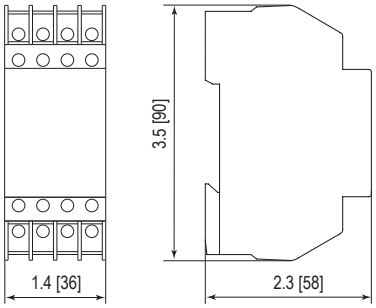

RS 485

Dimensions	
Weight per Unit	4.02 oz [114 g]
Dimensions DIN 43880	2TE
Packaging Dimensions (Single Unit)	1.5 × 2.9 × 4.2" [39 × 74 × 106 mm]
Minimum Package Quantity	6 pieces

inches
[mm]

RoHS COMPLIANT

SPD with Terminal Connection for Bus Systems

RayDat KNX

D1 • C1 • C2 • C3

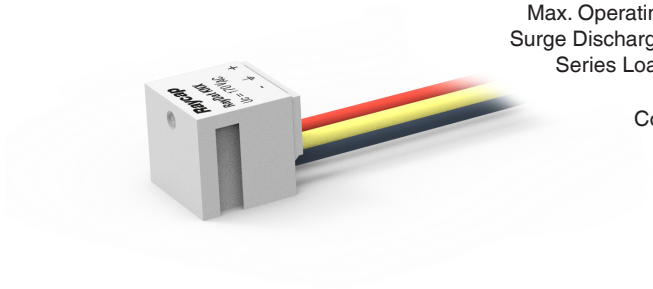

IEC/EN Category:	D1/C1/C2/C3
Voltages:	24 V AC
Max. Operating Voltage:	170 V DC
Surge Discharge Ratings:	I_n: 5 kA, I_{max}: 10 kA, I_{imp}: 1 kA
Series Load Current:	7 A
Housing:	Compact Design
Compliance:	IEC/EN 61643-21

Technical Data

RayDat KNX

Electrical		
Number of Protected Pairs		1 (2 conductors)
Nominal Operating Voltage (AC)	U_n	24 V
Maximum Continuous Operating Voltage (DC)	U_c	170 V
Rated Load Current at 25°C	I_L	7 A
C2 Nominal Discharge Current (8/20 µs)	I_n	5 kA
Maximum Discharge Current (8/20 µs)	I_{max}	10 kA
D1 Impulse Current (10/350 µs)	I_{imp}	1 kA
Residual Voltage at 5 kA (8/20 µs) (Line-Ground)	U_{res}	< 600 V
(Line-Line)		< 1000 V
Response Time Overvoltage Protection	t_A	< 100 ns
Thermal Protection		No
Insulation Resistance of the Protection	R_{iso}	≥ 1 GΩ
Serial Resistance per Path	R	< 0.1 Ω
Cut-off Frequency	f_G	50 MHz
Mechanical		
Temperature Range		-40 °F to +176 °F [-40 °C to +80 °C]
Line Conductors Cross Section		20 AWG [0.5 mm²]
Ground Conductor Cross Section		18 AWG [0.75 mm²]
Connecting Conductor Length		7.9" [200 mm]
Degree of Protection IEC/EN 60529		IP 20 (built-in)
Housing Material		Thermoplastic; Grey; Extinguishing Degree V-0
Order Information		
Order Code		
RayDat KNX		127 649

RayDat KNX

Internal Configuration

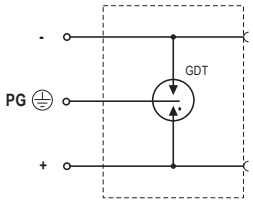

Legend
GDT Gas Discharge Tube
PG Protective Grounding

Dimensions & Packaging

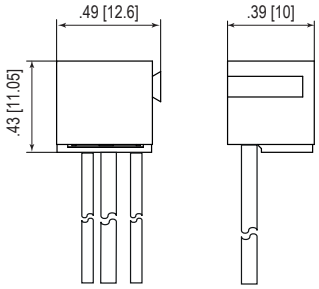

RayDat KNX

Dimensions	
Weight per Unit	.28 oz [8 g]
Packaging Dimensions (Single Unit)	3.1 × .91 × .4.3" [78 × 23 × 108 mm]
Minimum Package Quantity	12 pieces

inches
[mm]

RoHS COMPLIANT CE