DATASHEET

Lightning and Overvoltage Protection

ProTube T1S-440-100-0+1

Class I • Class II • Type 1 • Type 2

25 kA Series



Location of Use: Main Distribution Boards
Network Systems: TT, TN-S
Mode of Protection: N-PE
IEC/EN Category: Class I+II/Type 1+2
Housing: Pluggable Design
Compliance: IEC 61643-11:2011
EN 61643-11:2012+A11:2018

CE RoHS COMPLIANT

Technical Data

ProTube T1S-440-xxx-0+1		100
IEC Electrical		
Maximum Continuous Operating Voltage (AC)	U_c	440 V
Nominal Discharge Current (8/20 µs)	I_n	100 kA
Maximum Discharge Current (8/20 µs)	I_{max}	100 kA
Impulse Discharge Current (10/350 µs)	I_{imp}	100 kA
Specific Energy	W/R	2500 kJ/Ω
Charge	Q	50 As
Voltage Protection Level	U_p	1500 V
Response Time	t_A	< 100 ns
Overvoltage Category		III
Follow Current Interrupt Rating (AC)	I_{fi}	100 A
TOV 200ms	U_T/mode	1200 V/Withstand
Number of Ports		1
Additional Electrical Parameters *(Tests performed within Raycap testing laboratory only)*		
Residual Voltage at 5 kA (8/20 µs)	U_{res}	440 V
Mechanical & Environmental		
Operating Temperature Range	T_a	-40 °F to +185 °F [-40 °C to +85 °C]
Permissible Operating Humidity	RH	5%...95%
Pollution Degree		2
Altitude		6562 ft [2000 m]
Terminal Screw Torque	M_{max}	40 lbf·in [4.5 Nm]
Conductor Cross Section (max)		2 AWG (Solid, Stranded)/4 AWG (Flexible)
		35 mm² (Solid, Stranded)/25 mm² (Flexible)
Mounting		35 mm DIN Rail, EN 60715
Degree of Protection		IP 20 (built-in)
Housing Material		Thermoplastic: Extinguishing Degree UL 94 V-0
Operating State/Fault Indication		Green Flag/Not Green Flag
Remote Contacts (RC)		Optional
RC Switching Capacity		AC: 250 V/1 A, 125 V/1 A; DC: 48 V/0.5 A, 24 V/0.5 A, 12 V/0.5 A
RC Conductor Cross Section (max)		16 AWG (Solid)/1.5 mm² (Solid)
Overvoltage Category		III

Raycap

Information contained in this document is subject to change at any time without notice.
No part of this document may be reproduced or used without written permission from Raycap.

Internal Configuration

Legend

N *Neutral Conductor Terminal*
⏚ *PE Conductor Terminal*
TI *Thermal Indication*

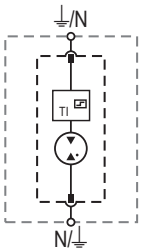

Order Information	
Order Code	**100**
ProTube T1S-440-xxx-0+1	59.A529
ProTube T1S-440-100-P (plug)	59.A516

Dimensions & Packaging

inches [mm]

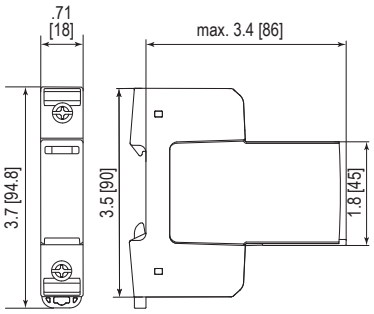

Complete Unit		
ProTube T1S-440-xxx-0+1		**100**
Weight	pounds [grams]	.403 [183]
DIN 43880 Dimension		1 TE/.71" [18 mm]
Packaging Dimensions (H x W x L)		4.3 x 4.5 x 13.8" [109 x 115 x 352 mm]
Standard Order Quantity		12 Units

Spare Plug

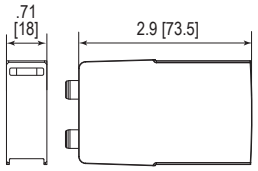

Single Unit		
ProTube T1S-440-100-P		**100**
Weight	pounds [grams]	.253 [115]
DIN 43880 Dimension		1 TE/.71" [18 mm]
Packaging Dimensions (H x W x L)		4.3 x 4.5 x 13.8" [109 x 115 x 352 mm]
Standard Order Quantity		28 Units

© 2026 Raycap All rights reserved.